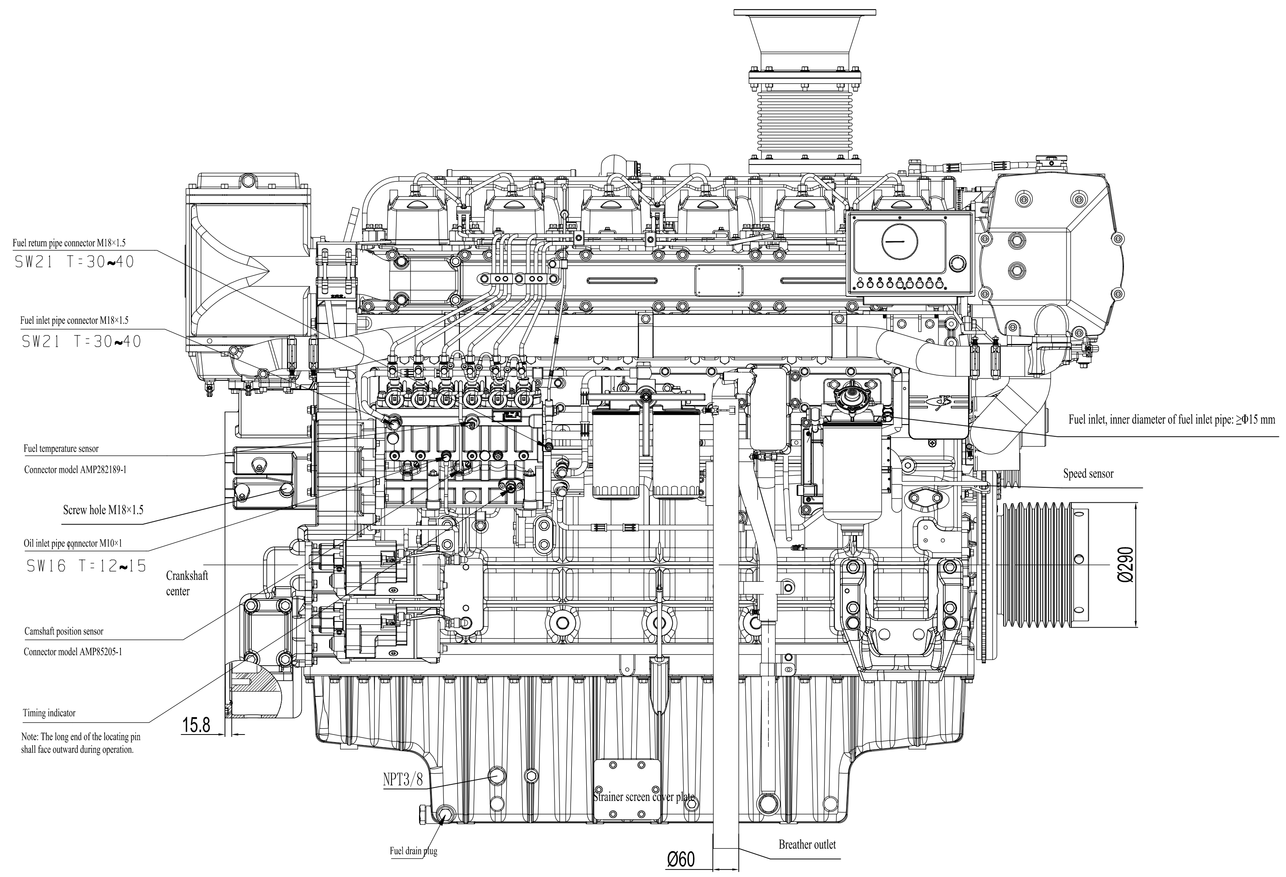

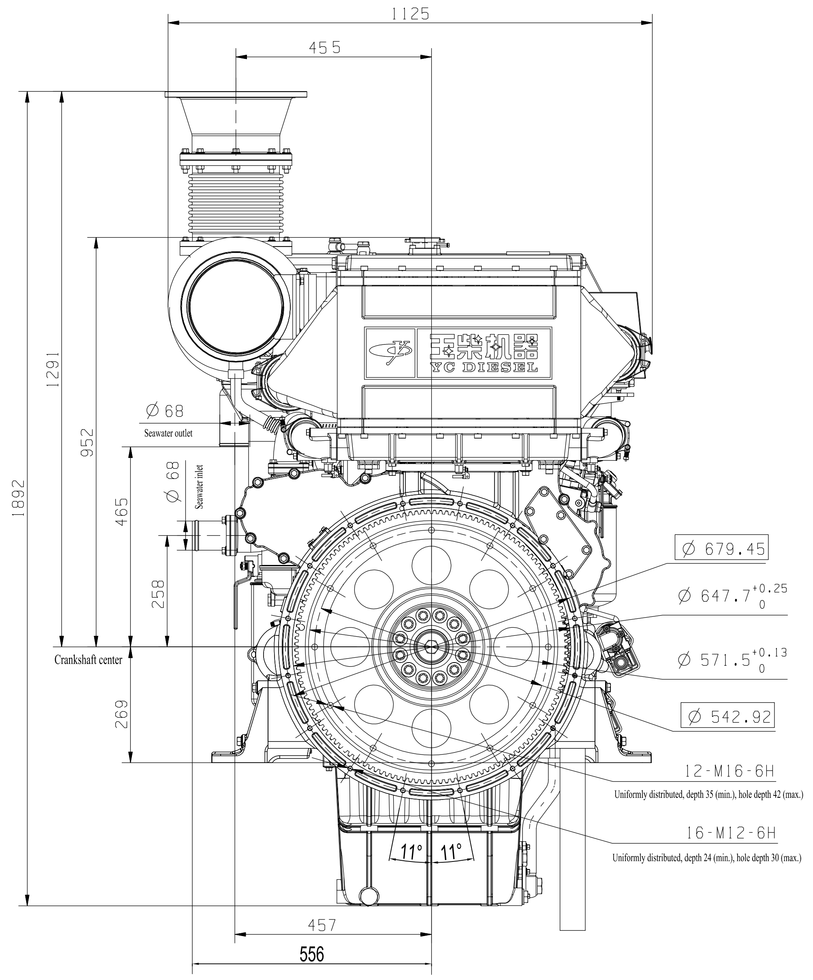

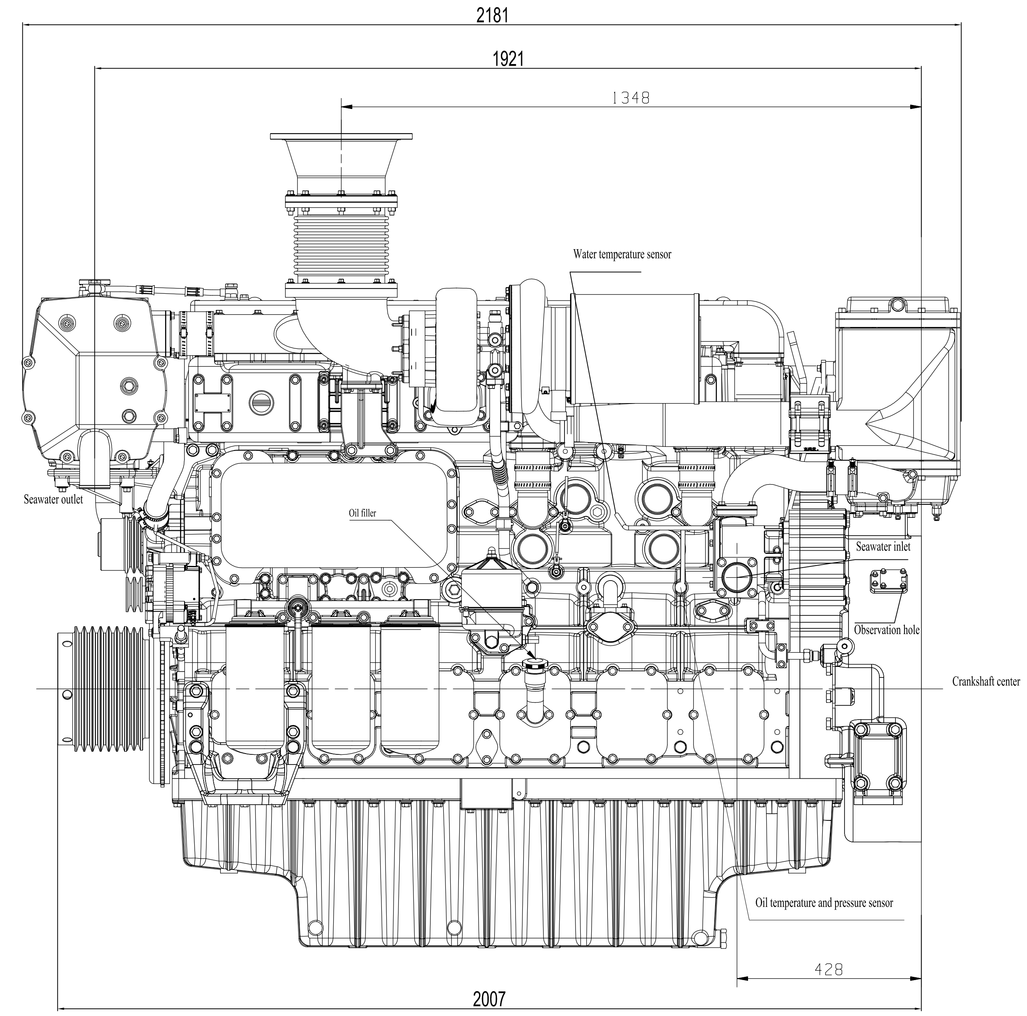

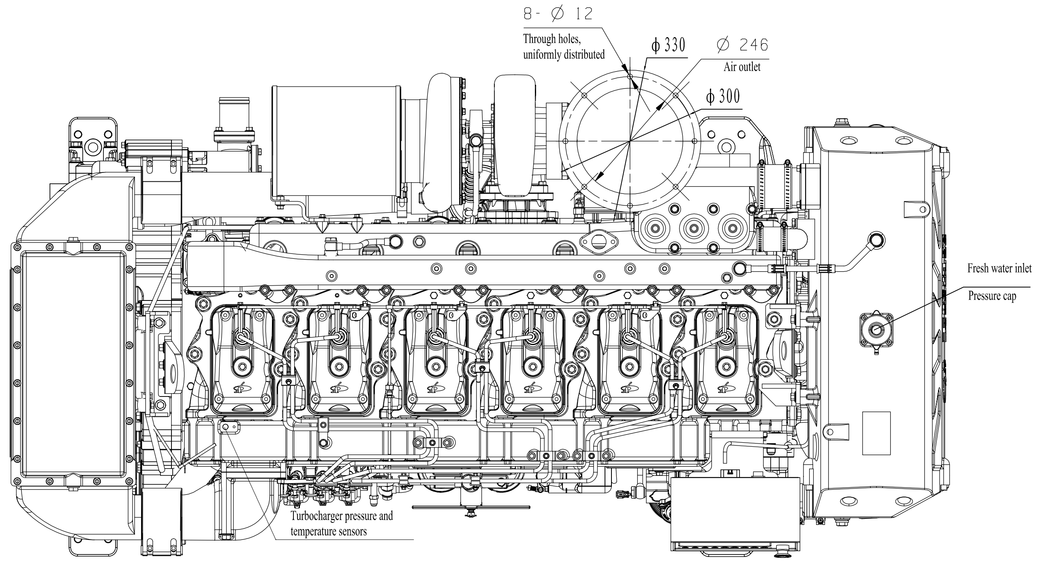

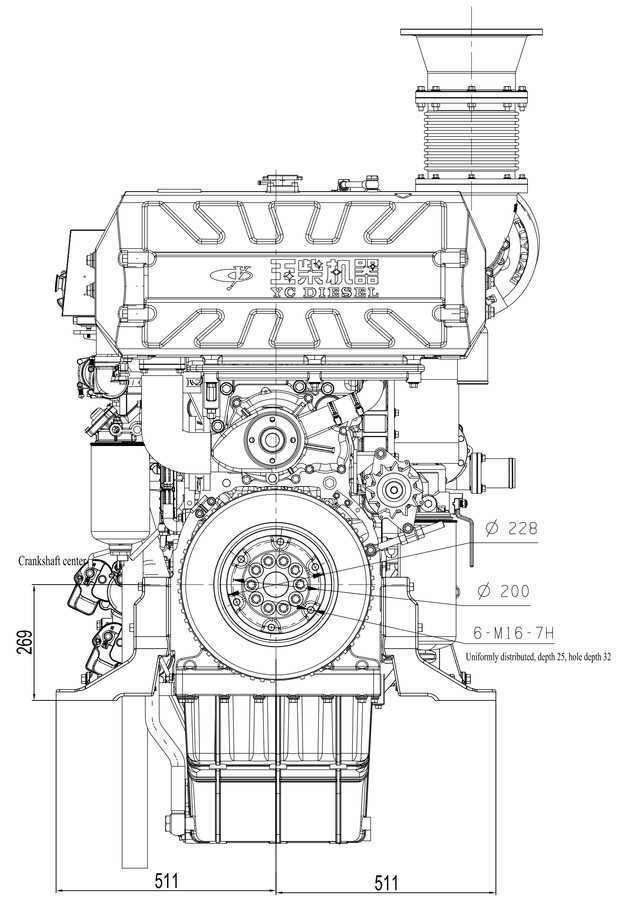

Installation Dimension Drawing of Base (Propulsion Engine)

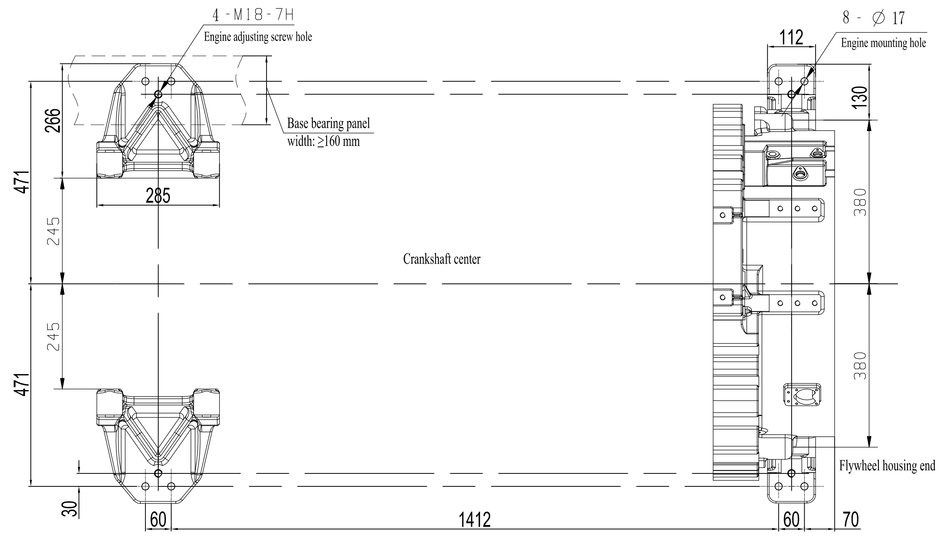

Installation Dimension Drawing of Base (G-drive Auxiliary Engine)

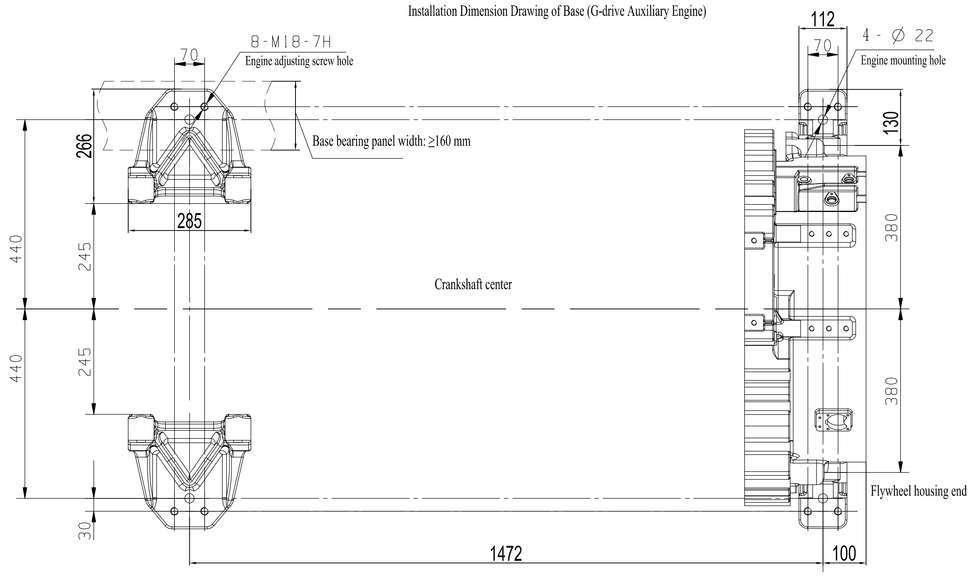

Outline and Installation Drawing of YC6TF Series Marine Engine

I. Interface: flywheel: SAE18", housing: SAE0#.

II. Front-end output: 6 B-grooves, 8 B-grooves or 6 C-grooves (optional).

III. Seawater pump: speed: n = 2,800 r/min; flow: Q = 600 L/min; head: H = 18m.

IV. Length × width × height: 2181 × 1125 × 1892 mm.

Mark	Nr.	Partition	Revised document No.	Signature	MM/DD/YY	Mark	Nr.	Partition	Revised document No.	Signature	MM/DD/YY	Mark	Nr.	Partition	Revised document No.	Signature	MM/DD/YY

Designed by			Process			Material	
Checked by			Standard				
Reviewed by			Approved by			Model	

Name	Outline and Installation Drawing	Drawing No.	TF200-4003106		
State Code	Version No.	Pcs./Set	Weight	Scale	
	01			1:10	
of 1		Sheet 1			
Guangxi Yuchai Machinery Co., Ltd.					

Shared Model Code	Shared by (Signature)on
Registration of Carry-over Parts	
Original Traced Drawing No.	
No. of Traced Drawing	
Signature	
Date	